NAD SERVICE MANUAL

MONITOR SERIES

1700

PREAMPLIFIER/TUNER

NAD 1700 SERVICE MANUAL

NOTE: This manual covers all versions.
A: U.S.A.
A1: Canada
B: U.K.
B1: Australia
C: EUROPE and others
C1: W-Germany

Page	Contents
3	Rear/Front View
4-6	Specifications
6	Safety Notice
7	Suggested Equipment Hookup
8-10	FM Alignment
11	AM Alignment
12	Preamp Adjustment
13-14	Wiring Diagram
15-16	Preamp PCB Layout
17-18	Preamp Schematic Diagram
19-20	Tuner PCB Layout
21-22	Tuner Schematic Diagram
23-28	Electrical Parts List
29-30	Exploded Parts List
31	Exploded View

REAR PANEL

1. AC Line Cord.
2. AC Outlets (not in U.K. model).
3. AM Antenna Terminals.
4. FM Antenna Input.
5. AM Rod Antenna.
6. Phono Ground.
7. Phono Input.
8. MM/MC.
9. Video Sound Input.
10. CD Input.
11. Tape 1 Input/Output.
12. Tape 2 Input/Output.
13. Output (Normal).
14. Output (High).
15. EPL (External Processor) Input/Output.
16. Infrasonic Filter On/Off.

CAUTION
RISK OF ELECTRIC SHOCK
DO NOT OPEN

CAUTION: TO REDUCE THE RISK OF ELECTRIC SHOCK, DO NOT REMOVE COVER (OR BACK). NO USER-SERVICEABLE PARTS INSIDE. REFER SERVICING TO QUALIFIED SERVICE PERSONNEL.

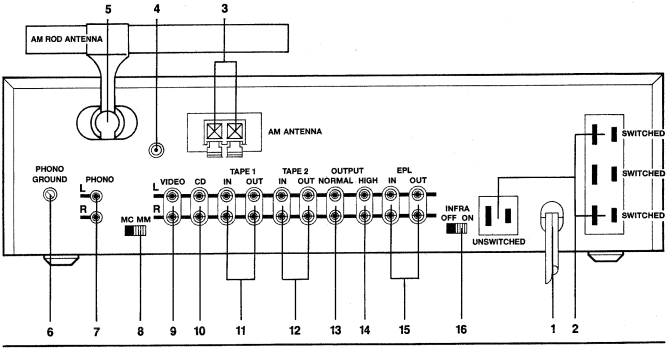

FRONT PANEL

1. Power.
2. Phones.
3. Phase Invert.
4. EPL (External Processor Loop).
5. Bass EQ.
6. Bass Range.
7. Bass.
8. Tone Control Bypass.
9. Treble.
10. Treble Range.
11. Tape Copy.
12. Tape Monitor 1 and 2.
13. Input Selector.
14. Low Level.
15. Balance.
16. Volume.
17. Tuning.
18. Tuning Display.
19. Status Indicators.
20. FM NR Off.
21. IF Narrow.
22. AM/FM.
23. Mono.
24. Memory Enter.
25. Bank Selector.
26. Pre-sets.

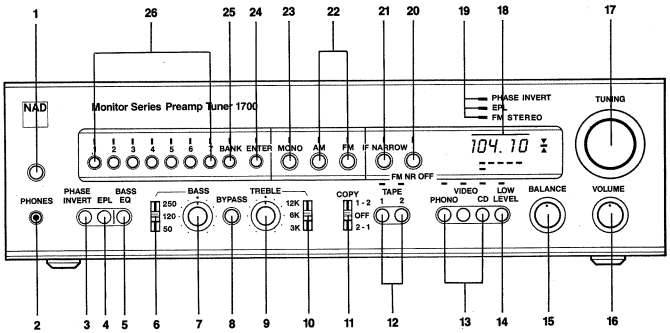

SPECIFICATIONS

Tuner specifications are measured in accordance with ANSI-IEEE Standard 185 (1975), i.e. IHF T-200. FM sensitivity is measured via 75-ohm coaxial input and expressed in nominally equivalent 300-ohm values. All measurements taken in Normal I.F. mode except where specified.
Preamp specifications are measured in accordance with EIA Standard RS-490 (formerly IHF A-202) and are referenced to the NORMAL output. Signal levels are 6 dB higher at the HIGH output; divide input sensitivity values by 2.

PREAMPLIFIER SECTION

PHONO INPUT

Input Impedance (MM or MC)		R = 47K ohms, C = 120 pF
Input Sensitivity (1 kHz, 0.5V out)	MM MC	1.4 mV 100 uV
Input Overload at 20Hz/1kHz/30kHz	MM MC	20/180/1500 mV 1.5/13/110 mV
Signal/Noise ratio, IHF A— weighted, with cartridge connected	MM MC	76 dB re 5 mV 76 dB re 0.5 mV
THD (20 Hz – 20 kHz) and IM Distortion at + 30 dB level		<0.04%
RIAA response accuracy		±0.5 dB

LINE LEVEL INPUTS (CD, VIDEO, TAPE, EPL)

Input Impedance	R = 100KΩ, C = 220pF
Input Sensitivity	80 mV for 0.5 V out
Maximum Input Signal	10 V
Signal/Noise ratio, A-weighted	>100 dB re 0.5 V out >110 dB re 2 V
Frequency Response	20Hz – 20kHz ±0.3 dB

OUTPUTS

Output Impedance	Tape or EPL Normal Phones & High	1000 ohms 600 ohms 150 ohms (will drive all headphone impedances)
Maximum Output Level		12 V (all outputs)
Tape Output Infrasonic Filter		−3 dB at 14 Hz, 12 dB/octave

CONTROLS

Treble	±12 dB at 3, 6, or 12 kHz
Bass	±12 dB at 50, 120, or 250 Hz
Bass Equalization	+3 dB at 60 Hz +6 dB at 36 Hz
Infrasonic Filter (switchable)	−3 dB at 14 Hz, 12 dB/octave

TUNER SECTION

FM SECTION

Input Sensitivity	dBf	uV/75 ohms	uV/300 ohms
Mono, −30 dB THD + N	10.3 dBf	0.9 uV	1.8 uV
Mono, 50 dB S/N	13 dBf	1.2 uV	2.4 uV
Stereo, 50 dB S/N			
FM NR on:	25 dBf	5 uV	10 uV
FM NR off:	35 dBf	15 uV	30 uV
Stereo, 60 dB S/N			
FM NR on:	35 dBf	15 uV	32 uV
FM NR off:	45 dBf	50 uV	100 uV

Capture Ratio	<1.5 dB from 45 to 85 dBf
AM rejection	>65 dB at 45 and 85 dBf
Selectivity (Normal I.F.)	75 dB alternate channel 7 dB adjacent channel
Selectivity (Narrow I.F.)	85 dB alternate channel 20 dB adjacent channel
Image rejection	>90 dB
R.F. intermodulation	>65 dB
I.F. rejection	>100 dB
SCA rejection	>70 dB
Subcarrier suppression	>60 dB (19 + 38 kHz)

THD at 100% modulation	1 kHz	100 Hz – 6 kHz
Mono:	0.08%	0.2%
Stereo:	0.08%	0.3%

Signal-to-noise ratio, IHF weighted	Mono:	>82 dB
	Stereo:	78 dB at 65 dBf, 80 dB at 85 dBf
Frequency response		30 Hz – 15 kHz ±0.5 dB
Stereo separation (FM NR off)		50 dB at 1 kHz 40 dB from 30 Hz to 10 kHz

AM SECTION

Usable sensitivity	300 uV/meter
Selectivity	35 dB
Image rejection	50 dB
I.F. rejection	50 dB
S/N ratio	45 dB (30% mod., 50 mV input)
THD	0.5%

PHYSICAL SPECIFICATIONS

Width × Height × Depth	43.5 × 12 × 29.3 cm (17.1 × 4.75 × 11.5 in.)
Net Weight	6.6 kg (14.5 lbs)
Shipping Weight	7.6 kg (16.7 lbs)
Power Requirement	50/60 Hz at 110, 120. 220 or 240 VAC 30 W

NOTE : NAD reserves the right to change specifications or designs at any time without notice. All specifications are those in effect at the time of printing.

SERVICE SAFETY PRECAUTIONS (UL)

1. *Use exact replacement parts for critical locations, marked "⚠" on parts list.*
2. *Return lead dress to original position, and re-install protective covers.*
3. *Before returning to customer, test for shock hazard; use either method A or B:*

A. Leakage test, "cold":

1. *Unplug AC cord, turn power switch ON.*
2. *Connect one lead of High Voltage Insulation Tester to both prongs of AC plug.*
3. *Touch other lead to all exposed metal parts.*
4. *Impedance measurement must be 0.3 - 5.0 Megohms.*

B. Leakage test, "live":

1. *Plug unit directly into AC outlet; do not use isolation transformer.*
2. *Connect one lead of Leakage Current Tester to earth ground.*
3. *Touch other lead to all exposed metal parts.*
4. *Leakage measurement must be less than 0.5 milliamps.*

SUGGESTED INSTRUMENTATION HOOKUP – FM ALIGNMENT

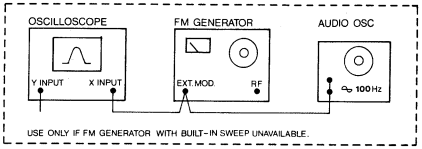

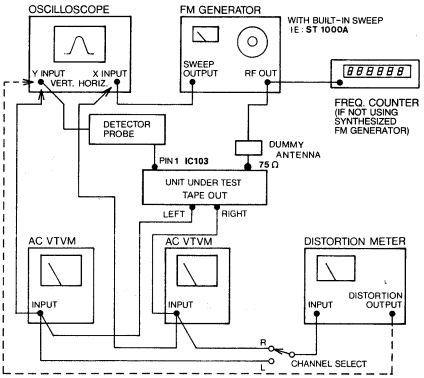

SCHEMATIC DIAGRAM OF DETECTOR PROBE

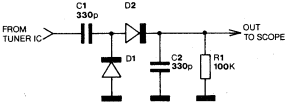

Diodes should be point-contact germanium; Some commonly available types are: OA80, OA81, AA119, 1N60, 1N34, 1N22

PICTORIAL DIAGRAM OF DETECTOR PROBE

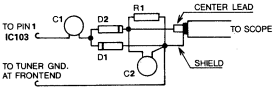

Keep leads as shortas possible, to minimize stray signal pickup.

FM ALIGNMENTS

NECESSARY INSTRUMENTATION

- Stereo Modulator (less than 0.05% THD, more than 50dB Sep.)
- FM Generator (less than 0.05% THD)
- 75 ohm Dummy Antenna (if needed by generator)
- Audio Oscillator (not necessary if FM Generator has built-in sweep, e.g., SOUND TECHNOLOGY ST 1000A or ST 1020A)
- 2 AC VTVM's (or one with a Left/Right switch)
- THD Analyzer (resolution less than 0.1%)
- Oscilloscope (5mV or better sensitivity, X-Y capability)
- Frequency Counter
- Detector Probe

IMPORTANT NOTES

1) RF levels are at antenna input.
2) Before alignments commence, switch off IF NARROW, FM NR and MONO; select FM.
3) If FM Generator is not synthesizer-type, be sure to check its frequency with Frequency Counter when adjusting detector and multiplex decoder circuits.
4) Hum in measurements may be caused by ground loop via antenna cable; if so, use isolation balun, or isolate cable shield and hot with small capacitors (470~1000pf).
5) To adjust front-end coils, bend gently with wooden or plastic tool (non-interactive).

A. FM LOCAL OSCILLATOR FREQUENCY

1. Connect Frequency Counter between TP-107 and Ground.
2. Tune to 90 MHz (No RF input needed).
3. Adjust C-278 so that reading is 100.700MHz +/− 2kHz.

B. FRONT-END ALIGNMENTS (should only be necessary after repair to front end).

a) TUNING VOLTAGE

1. Connect DMM between TP-101 and Ground.
2. Tune to 88.00MHz, and adjust L-6 if reading is not 3.2V +/− 0.5V.
3. Tune to 108.00MHz, and check that reading is 22.5V +/− 1.5V.
4. Repeat above steps 2 and 3 until within tolerance.

b) TRACKING

1. Connect FM Generator to 75 ohm antenna input (modulate +/− 150kHz sweep) and Detector Probe to Pin 1 of IC-103 (ground to tunershield).
2. Adjust vertical sensitivity of Oscilloscope to maximum, and set to X-Y mode. (X input is sweep signal, Y is detector probe).
3. Set tuner to 105MHz, enter into Preset 2, and adjust generator so that curve appears on Oscilloscope, and covers approximately 1/2 of display.
4. Adjust C-2, C-10 and C-12 for maximum curve height, while reducing FM Generator output, if necessary, to keep entire curve on display.
5. Set tuner to 90MHz, enter into Preset 1, and adjust Generator so that curve appears on Oscilloscope.
6. Adjust L-2, L-4 and L-5 for maximum curve height.
7. Repeat above steps 3, 4, 5 and 6 (use Preset 1 and 2) until both curves are at maximum height.

   Note: 105MHz curve is typically slightly higher than 90MHz.

C. IF ADJUSTMENTS

1. Set tuner to approximately 98MHz (must be an unoccupied frequency), and adjust FM Generator to display curve on the Oscilloscope.
2. Adjust L-8 and L-101 for maximum and symmetrical curve using as little RF input as possible.

D. DETECTOR ALIGNMENT

1. Remove Detector Probe, and connect the Tape Output to Distortion Analyzer and Oscilloscope.
2. Connect DMM between TP-103 (−) and TP-104 (+).
3. Tune to 98MHz and feed 1000uV from FM Generator (Modulate 1kHz 100%, Mono).
4. Adjust L-102 Secondary for lowest THD. Specification: less than 0.12%.
5. Adjust L-102 Primary for 0V reading on DMM. Tolerance: +/− 50mV.
6. Repeat above steps 4 & 5 until no further improvement.

E. STEREO DISTORTION & SEPARATION

1. Tune to 98MHz and feed 1000uV from FM Generator. Modulate 1kHz, 100% left (or right) only.
2. Adjust L-101 and L-8 just slightly so that distortion on left (or right) channel becomes minimum.
3. Check stereo distortion, wide IF: Specification: less than 0.1%, L + R, L only, R only, L − R.
4. Next, select IF NARROW, and check distortion: Specification: less than 0.15%, L only, R only, L − R.
5. Set IF to wide and modulate L only. Adjust R-375 for minimum output on right channel.
   Next, modulate R only and adjust R-375 for minimum output on left channel.
   If necessary, readjust R-375 so that readings become same on both channels. Specification: more than 46dB.
6. Select IF NARROW, and modulate left (or right) channel only. Adjust R-376 for minimum output on right (or left) channel VTVM and Oscilloscope.
   If necessary, readjust R-376 so that readings become same on both channels. Specification: more than 40dB.

F. AUTO SEARCH LEVEL

1. Set IF to wide. Connect DMM between TP-105 and Ground.
2. Set FM Generator output to 10uV and adjust R-378 so that reading just goes from 0V to 40V.
   Tolerance: +/− 2μV.

G. STEREO SWITCHING LEVEL

1. Set FM Generator output to 5uV, 1kHz 100% L + R.
2. Adjust R-379 so that the stereo
   light just turns on. Tolerance: + 2uV.

   Note: The tuner will switch into mono at a lower level, typically 4uV.

H. SIGNAL METER LEVEL

1. Tune to 98MHz and feed 100uV from FM Generator.
2. Adjust R-380 so that fifth LED just lights.

I. PARTIAL MUTING

1. Set FM Generator output to 0.5uV, 1kHz 30% Mono modulation. Set R-381 full CCW.
2. If S/N above 702760; set FM NR on, tune away from, then back to, RF Generator frequency.
3. Adjust R-381 so that muting just turns off.

J. FM NR CIRCUIT: MULTIPLEX FILTERS

1. Check that FM NR is off.
2. Set FM Generator output to 2000uV, 1kHz 100% L + R, and set reference for S/N measurement. Cancel the stereo modulation and leave pilot tone.
3. Adjust FL 102 (FL 103) for minimum subcarrier output on left (right) channel; Specification: less than − 60dB.
4. Adjust FM Generator output so that S/N ratio reads 50dB.
5. Switch FM NR on, and adjust R-148 so the S/N is improved by 8dB.
6. Switch FM NR off, and adjust FM Generator output so that S/N ratio reads 60dB.
7. Switch FM NR on, and check that S/N is improved by approx. 2dB.

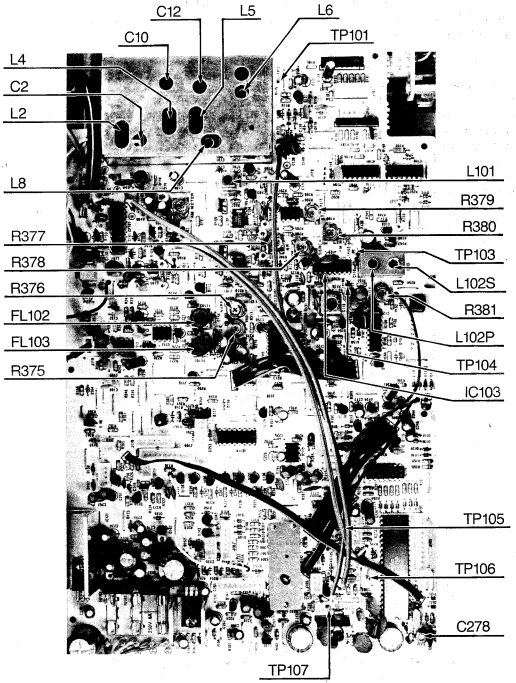
C12
L5
L6
C10
TP101
L4
C2
L2
L8
L101
R379
R380
R377
TP103
R378
L102S
R376
R381
FL102
L102P
FL103
TP104
R375
IC103
TP105
TP106
C278
TP107

AM ALIGNMENTS

A. OSCILLATOR

1. Connect DMM between TP-102 and ground.
2. Tune to 1710kHz. Enter into preset 2. Adjust C-279 for reading of 31 ± 0.5 VDC.
3. Tune to 520kHz. Enter into preset 1. Adjust L-105 for reading of 1.8 ± 0.1 VDC.
4. Repeat above steps 2 and 3 until within tolerance.

B. ANTENNA, IF

1. Swing antenna away from chassis.
2. Connect DC voltmeter to centertap, R-382 and ground.
3. Tune to a station of moderate strength near 1400kHz. Enter into Preset 4. Adjust C-280 for maximum reading on meter.
4. Adjust L-106 and L-107 for maximum reading on meter.
5. Tune to a station of moderate strength near 600kHz. Enter into Preset 3. Adjust L-901 for maximum reading on meter (use non-interactive tool, such as plastic or wooden stick).
6. Repeat above steps 3 and 5 until no further improvement is seen.

C. SIGNAL METER LEVEL

1. Tune to 1,000kHz and feed 1000uV to antenna terminals.
2. Adjust R-382 so that fifth LED just lights up.

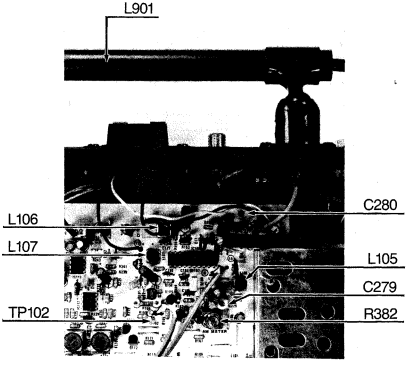

PREAMPLIFIER ADJUSTMENTS

A. CHANNEL BALANCE

1. Feed 1kHz, 100mV to CD input; connect AC VTVM's to normal output.
2. Set volume to maximum, balance to center, low level off.
3. Adjust R-545 so that both channels have same output level ± 0.25dB.

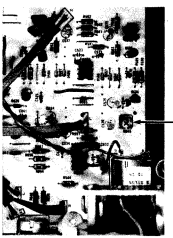

WIRING DIAGRAM

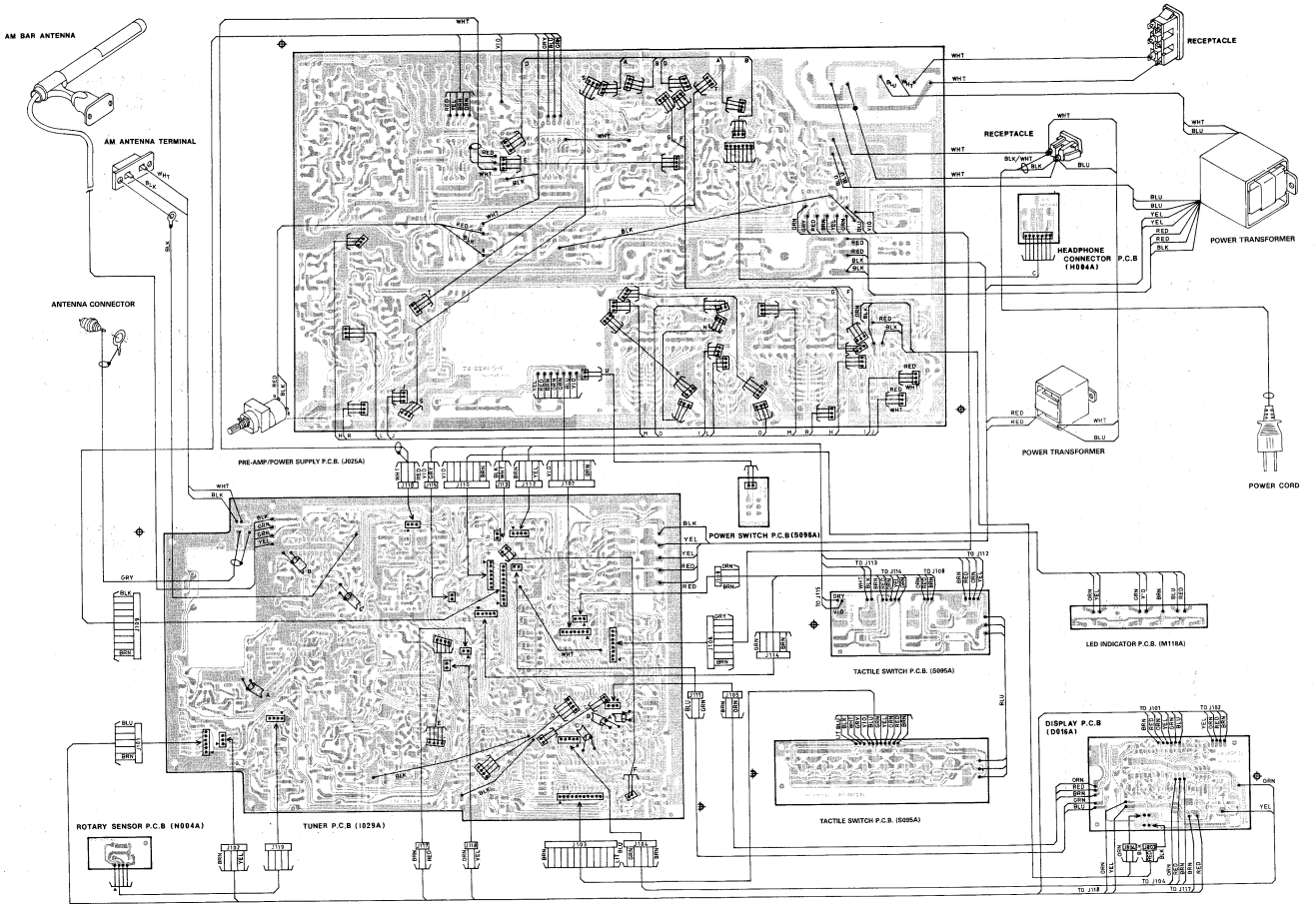

PREAMPLIFIER P.C.B. LAYOUT DIAGRAM

PRE-AMP/POWER SUPPLY P.C.B. ASS'Y (J025A)

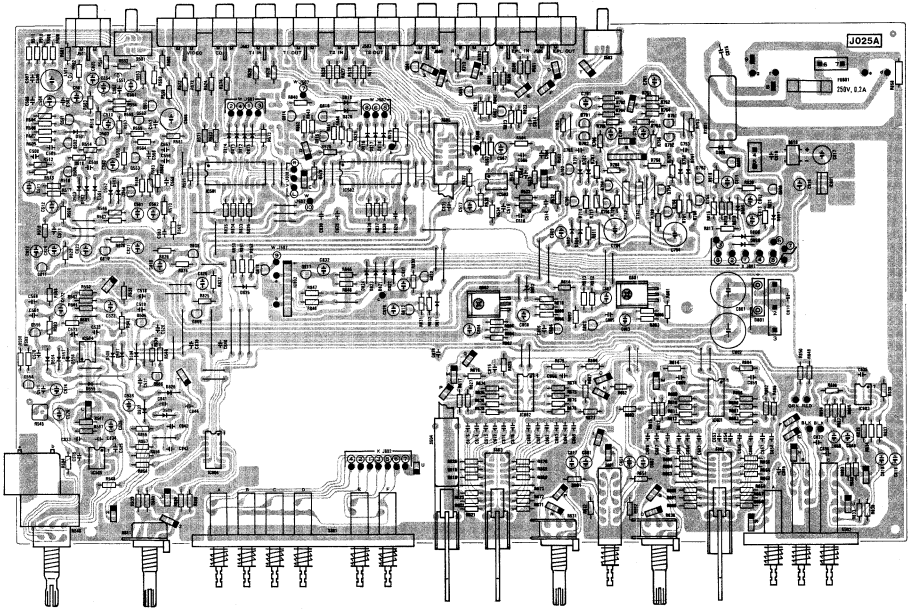

HEADPHONE CONNECTOR P.C.B. ASS'Y
(H004A)

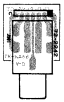

LED INDICATOR P.C.B. ASS'Y
(M118A)

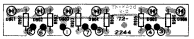

POWER SWITCH P.C.B. ASS'Y
(S096A)

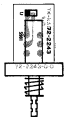

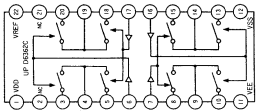

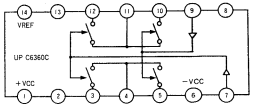

SCHEMATIC DIAGRAM
NAD 1700 PREAMPLIFIER SECTION

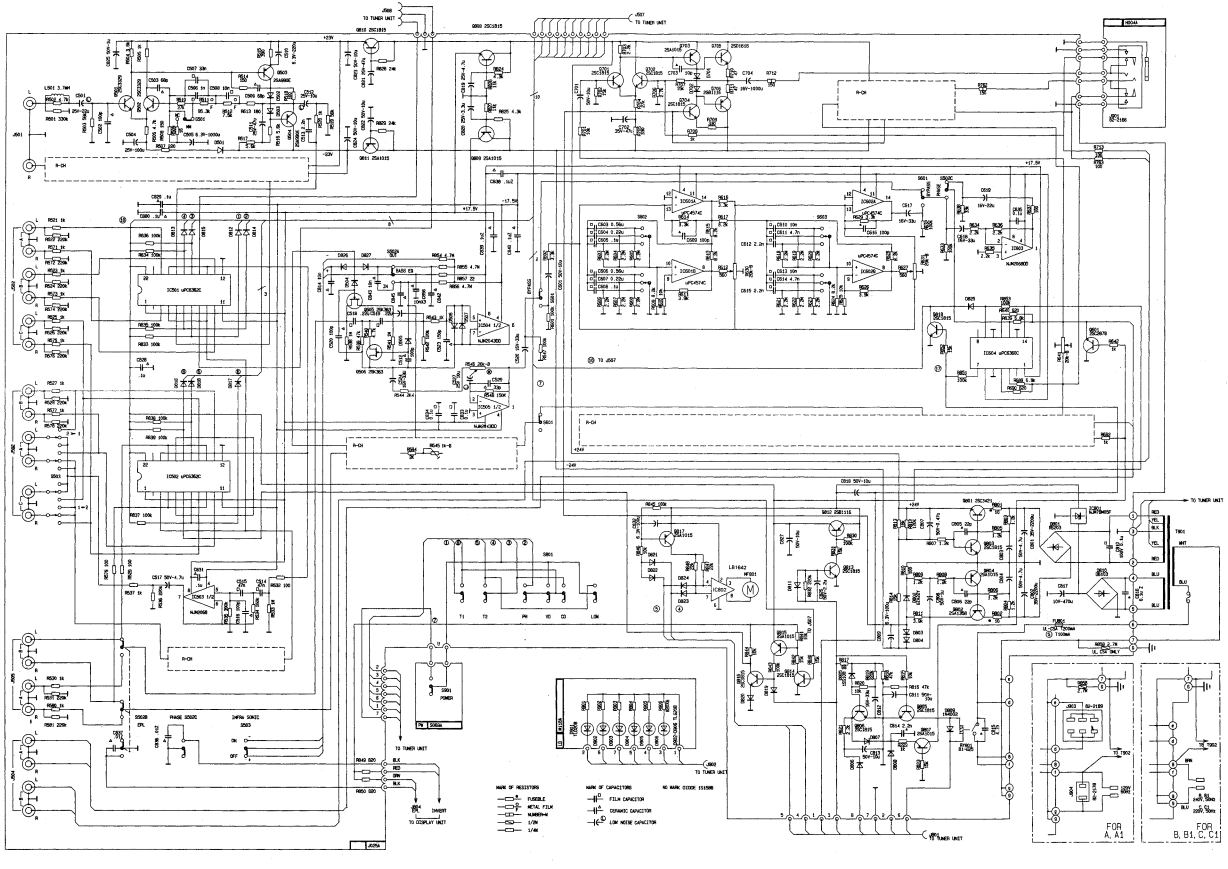

TUNER P.C.B. LAYOUT DIAGRAM

TUNER P.C.B. ASS'Y (I029A)

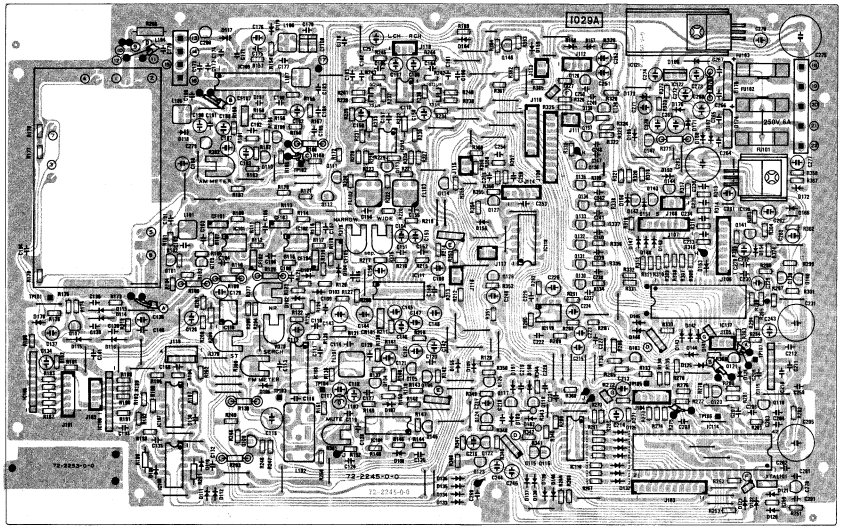

FM FRONT-END P.C.B. ASS'Y (F017C)

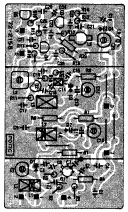

ROTARY SENSOR P.C.B. ASS'Y (N004A)

LED DISPLAY P.C.B. ASS'Y (D016A)

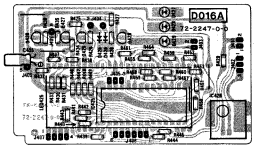

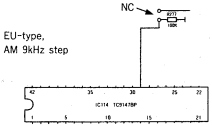

TACTILE SWITCH P.C.B. ASS'Y (S095A)

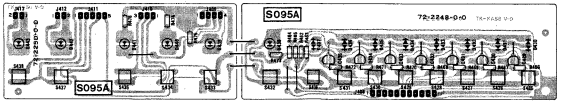

SCHEMATIC DIAGRAM
NAD 1700 TUNER SECTION

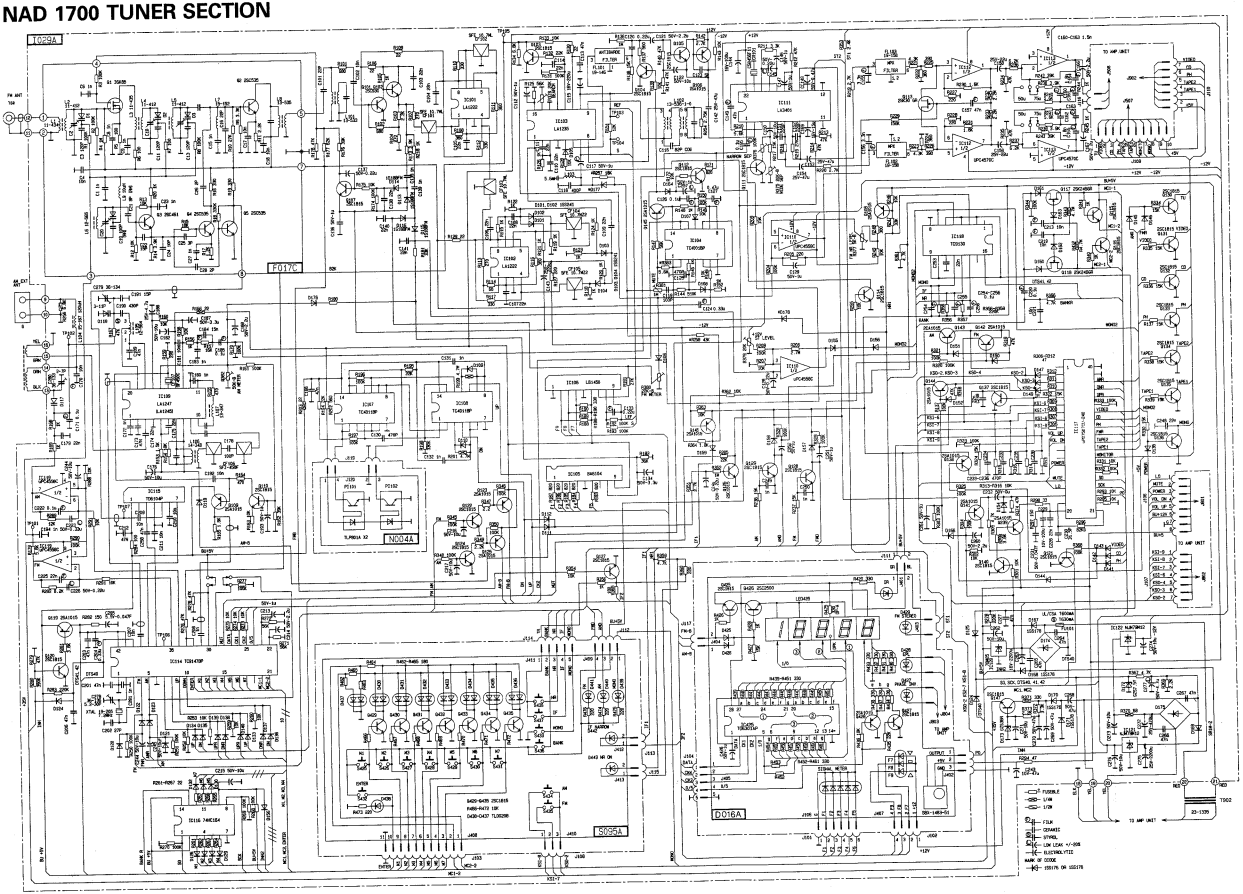

*PART ADDED
FROM S/N 702760

ELECTRICAL PARTS LIST

NOTE: This is not a complete electrical parts list.

1) FM FRONT-END ASSEMBLY: F017C (EXPLODED VIEW INDEX #51)

PARTS NO.	SYMBOL NO.	DESCRIPTION
72-2158-0		P.C. BOARD
2SC 461B	Q3	TRANSISITOR
2SC 535B	Q2, 4, 5.	TRANSISITOR
3SK 45B (or 3SK85)	Q1	TRANSISITOR (MOS FET)
1SV53 F2	D1~4.	DIODE (VARIABLE CAPACITANCE)
11-434	L1	ANTENNA COIL, PRIMARY
11-412	L2, 4, 5	ANTENNA COIL, SECONDARY
11-435	L3	RF COIL
15-152	L7	CHOKE COIL, VFC-15E
15-166	L9	CHOKE COIL, LF-7.5, 10μH.
13-533 (or 13-535)	L8	IFT COIL, FI-6
12-565	L6	OSCILLATOR COIL, E520HN
36-134	C2, 10, 12, 20.	TRIMMER CAPACITOR, 3~11pF.
50V 2pF	C28	CERAMIC DISC CAPACITOR, CK
50V 2pF	C26	CERAMIC DISC CAPACITOR, SL
50V 3pF	C25	CERAMIC DISC CAPACITOR, CJ
50V 5pF	C14	CERAMIC DISC CAPACITOR, SL
50V 8pF	C21	CERAMIC DISC CAPACITOR, RH
50V 10pF	C24	CERAMIC DISC CAPACITOR, SH
50V 15pF	C22	CERAMIC DISC CAPACITOR, SH
50V 22pF	C5, C16	CERAMIC DISC CAPACITOR, SL
50V 100pF	C19	CERAMIC DISC CAPACITOR, RH
50V 120pF	C3, 11, 13.	CERAMIC DISC CAPACITOR, SL
50V 0.001μF	C1, 6~9, 15, 23, 27.	CERAMIC DISC CAPACITOR, B
50V 0.01μF	C4, 17, 18.	CERAMIC DISC CAPACITOR, F
87-1101	1~5, 7, 8.	PIN TERMINAL, 1 × 14L
74-2167-0-1		CASE
74-2168-0-0		SHIELDING PLATE
74-2171-0-0		COVER

2) TUNER P.C.B. ASSEMBLY; 1029A (EXPLODED VIEW INDEX #47)

PARTS NO.	SYMBOL NO.	DESCRIPTION
72-2245-0		P.C. BOARD
74HC164	IC116	INTEGRATED CIRCUIT
TC4001BP	IC104	INTEGRATED CIRCUIT
TC4011BP	IC107, 108.	INTEGRATED CIRCUIT
TC9147BP	IC114	INTEGRATED CIRCUIT
TD6104P	IC115	INTEGRATED CIRCUIT
TC9130	IC118	INTEGRATED CIRCUIT
LA1235	IC103	INTEGRATED CIRCUIT
LA1247 (OR LA1245)	IC109	INTEGRATED CIRCUIT
LA1222	IC101, 102.	INTEGRATED CIRCUIT
LA3401	IC111	INTEGRATED CIRCUIT
LB1450	IC106	INTEGRATED CIRCUIT
BA6104	IC105	INTEGRATED CIRCUIT
μPC4558	IC110, 119.	INTEGRATED CIRCUIT
μPC4570C	IC112, 113.	INTEGRATED CIRCUIT

PARTS NO.	SYMBOL NO.	DESCRIPTION
μPD7507	IC117	INTEGRATED CIRCUIT
78M05FA	IC120	INTEGRATED CIRCUIT, 5V 0.5A.
78M12FA	IC121	INTEGRATED CIRCUIT, 12V 0.5A.
79M12FA	IC122	INTEGRATED CIRCUIT, −12V 0.5A.
2SA1015	Q106, 108, 109, 119, 123, 125, 138, 139, 141~146.	TRANSISTOR
2SC1815	Q103~105, 107, 110~112, 114~116, 120~122, 124, 126~137, 140, 147.	TRANSISTOR
2SC930E	Q101, 102	TRANSISTOR
2SK 30	Q113	F.E.T.
2SK246	Q117, 118.	F.E.T.
KV1226V	D117, 118.	DIODE (VARIABLE CAPACITANCE)
GZS36R (or GZA36X)	D173	ZENER DIODE
GZS7.5Y	D172	ZENER DIODE
SR-1M-2	D169	SILICON DIODE, 100V 1A.
DBA10B	D174, 175.	SILICON DIODE, 100V 1A.
1SS176		SILICON DIODE, 100V 1A.
1SS178 (or SR-1M-2)	D167, 168, 170, 171.	SILICON DIODE, 100V 1A.
1SS241	D101~104.	SILICON DIODE, 100V 1A.
1S188FM	D113~116.	GERMANIUM DIODE
CSB456F11	CR101	CERAMIC OSCILLATOR
19-205	XTAL101	CRYSTAL OSCILLATOR, 7.2MHz
BFU450C	CF107	CERAMIC FILTER
SFZ450F	CF106	CERAMIC FILTER
SFE10.7MLK	CF101~103.	CERAMIC FILTER
SFE10.7MZ2	CF104, 105.	CERAMIC FILTER
14-310	L103	INDUCTOR COIL, 5.6mH
15-167	L104	INDUCTOR COIL, 120μH
12-564	L105	OSCILLATOR COIL
13-347	L107	IFT COIL
13-348	L106	IFT COIL
13-533	L101	IFT COIL
13-536-1	L102	IFT COIL
19-146	FL101	ANTI-BIRDIE FILTER
19-158	FL102, 103	MPX FILTER
36-133	C280	TRIMMER CAPACITOR, 2~7pF
36-134	C279	TRIMMER CAPACITOR, 3~11pF
36-136	C278	TRIMMER CAPACITOR, 5.2~30pF
41-787	R377 (FM NR)	VARIABLE RESISTOR, 5K ohm
41-788	R379 (STEREO LEVEL)	VARIABLE RESISTOR, 10K ohm
41-789	R375 (IF WIDE), R378 (SEARCH), R380 (FM METER)	VARIABLE RESISTOR, 20K ohm
41-791	R382 (AM METER)	VARIABLE RESISTOR, 50K ohm
41-792	R376 (IF NARROW)	VARIABLE RESISTOR, 100K ohm
41-796	R381 (MUTE)	VARIABLE RESISTOR, 1M ohm
5.5V 0.047F	C205, 231.	MEMORY BACK-UP CAPACITOR
50V 5pF	C123	CERAMIC DISC CAPACITOR, CH
50V 82pF	C116	CERAMIC DISC CAPACIOR, FK11 COGIH

PARTS NO.	SYMBOL NO.	DESCRIPTION
50V 31.5pF	C230	CERAMIC DISC CAPACITOR, CK
50V 0.1μF	C126, 171, 185, 195, 220, 222, 254~256.	FILM CAPACITOR, ECQV1H
50V 0.22μF	C120, 133.	FILM CAPACITOR, ECQV1H
50V 0.33μF	C124, 204.	FILM CAPACITOR, ECQV1H
50V 0.47μF	C127	FILM CAPACITOR, ECQV1H
50V 0.22μF	C226, 246.	ELECTROLYTIC CAPACITOR, MS
50V 0.33μF	C223	ELECTROLYTIC CAPACITOR, MS
50V 0.47μF	C145	ELECTROLYTIC CAPACITOR, MS
50V 1μF	C117, 146, 257.	ELECTROLYTIC CAPACITOR, MS
25V 4.7μF	C277	ELECTROLYTIC CAPACITOR, MS
16V 2200μF	C264	ELECTROLYTIC CAPACITOR, MS
6.3V 15μF	C169	ELECTROLYTIC CAPACITOR, MS
⚠1/4W 68 ohm	R370	FUSIBLE RESISTOR
⚠250V 600mA	FU101	FUSE, 5TT (A, A1)
⚠250V 630mA	FU101	FUSE, 5ST (B & C)
71-1246		FUSE HOLDER, 5ø
87-1101		PIN TERMINAL, 1 × 14L
87-129		WRAPPING TERMINAL, KSB-4L-50
87-158		WRAPPING TERMINAL, KSB-5L-75
52011-0410	J119	CONNECTOR, 4P
B2B-XH-A	J111, 113, 115, 117, 118.	CONNECTOR BASE POST, 2P
B3B-XH-A	J105, 108, 116.	CONNECTOR BASE POST, 3P
B4B-XH-A	J102, 112.	CONNECTOR BASE POST, 4P
B5B-XH-A	J104, 114.	CONNECTOR BASE POST, 5P
B6B-XH-A	J101	CONNECTOR BASE POST, 6P
B7B-XH-A	J107, 110.	CONNECTOR BASE POST, 7P
B8B-XH-A	J106	CONNECTOR BASE POST, 8P
B10B-XH-A	J109	CONNECTOR BASE POST, 10P
B11B-XH-A	J103	CONNECTOR BASE POST, 11P
87-6075		JUMPER CABLE, 2-CONDUCTORS, L=190
87-6128		JUMPER CABLE, 2-CONDUCTORS, L=65
87-6129		JUMPER CABLE, 4-CONDUCTORS, L=90
74-3111-0		HEAT SINK
74-3112-0		HEAT SINK

3) ROTARY SENSOR ASSEMBLY; N004A (EXPLODED VIEW INDEX #50)

PARTS NO.	SYMBOL NO.	DESCRIPTION
72-2246-0		P.C. BOARD
TLP801A	PI101, 102.	PHOTO INTERRUPTOR
87-6103-0	J120	JUMPER CABLE, 4-CONDUCTORS, L = 260

4) LED DISPLAY ASSEMBLY; D016A (EXPLODED VIEW INDEX #49)

PARTS NO.	SYMBOL NO.	DESCRIPTION
72-2247-0		P.C. BOARD
TD6301AP	IC425	INTEGRATED CIRCUIT
SBX1483	IC426	INTEGRATED CIRCUIT
2SA1015	Q428	TRANSISTOR
2SC1815	Q425, 427.	TRANSISTOR
2SC2500	Q426	TRANSISTOR

PARTS NO.	SYMBOL NO.	DESCRIPTION
1SS176	D425, 426.	DIODE
SL-5653	LED425	LED INDICATOR
TL0280	D427, 428, 429.	LED (ORANGE)
84-3270-0	J406	CONNECTOR W/LEAD, 6P
84-3271-0	J405	CONNECTOR W/LEAD, 5P
84-3273-0	J407	CONNECTOR W/LEAD, 4P
84-3275-0	J402	CONNECTOR W/LEAD, 3P
84-3277-0	J404	CONNECTOR W/LEAD, 2P (BROWN/RED)
84-3278-0	J403	CONNECTOR W/LEAD, 2P (ORANGE/YELLOW)
84-3279-0	J401	CONNECTOR W/LEAD, 2P (GREEN/BLUE)

5) TACTILE SWITCH ASSEMBLY; S095A (EXPLODED VIEW INDEX #48)

PARTS NO.	SYMBOL NO.	DESCRIPTION
72-2248-0		P.C. BOARD
72-2250-0		P.C. BOARD
2SC1815	Q429~435	TRANSISTOR
TL0G208	D430~437	L.E.D. (ORANGE/GREEN)
TL0208	D442, 443	L.E.D. (ORANGE)
TLG208	D439~441	L.E.D. (GREEN)
TLR208	D438	L.E.D. (RED)
81-2345	S425~438	TACTILE SWITCH
84-3269-0	J408	CONNECTOR W/LEAD, 11P
84-3272-0	J411	CONNECTOR W/LEAD, 5P
84-3274-0	J409	CONNECTOR W/LEAD, 4P
84-3276-0	J410	CONNECTOR W/LEAD, 3P
84-3280-0	J413	CONNECTOR W/LEAD, 2P (GREY/PURPLE)
84-3281-0	J412	CONNECTOR W/LEAD, 2P (WHITE/BLACK)

6) LED INDICATOR ASSEMBLY; M118A (EXPLODED VIEW INDEX #44)

PARTS NO.	SYMBOL NO.	DESCRIPTION
72-2244-0		P.C. BOARD
TLG208	D902~906.	L.E.D.
TLO208	D901	L.E.D.
84-3282	1~7	CONNECTOR W/LEAD, L=470

7) PRE-AMPLIFIER/POWER SUPPLY P.C.B. ASSEMBLY; J025A (EXPLODED VIEW INDEX #43)

PARTS NO.	SYMBOL NO.	DESCRIPTION
72-2241-0-1		P.C. BOARD
2SA1358	Q802	TRANSISTOR
2SA1015	Q703, 753, 804, 807, 809, 811, 815, 817.	TRANSISTOR
2SA990	Q503, 504, 553, 554.	TRANSISTOR
2SB1116	Q706, 756, 812.	TRANSISTOR
2SC1815	Q701, 702, 704, 751, 752, 754, 803, 805, 806, 808, 810, 813, 814, 816, 818.	TRANSISTOR

PARTS NO.	SYMBOL NO.	DESCRIPTION
2SC2878	Q601, 651.	TRANSISTOR
2SC3329	Q501, 502, 551, 552.	TRANSISTOR
2SC3421	Q801	TRANSISTOR
2SD1616	Q705, 755.	TRANSISTOR
2SK363	Q505, 506, 555, 556.	TRANSISTOR
NJM2043	IC504, 505.	INTEGRATED CIRCUIT
NJM2068	IC503, 603.	INTEGRATED CIRCUIT
NJM78M05	IC801	INTEGRATED CIRCUIT
μPC4574	IC601, 602.	INTEGRATED CIRCUIT
μPD6360	IC604	INTEGRATED CIRCUIT
μPD6362	IC501, 502.	INTEGRATED CIRCUIT
LB1642	IC802	INTEGRATED CIRCUIT
1SS108	D805	DIODE
1N4002	D809	DIODE
RS203	D801	DIODE
DB103	D810	DIODE
1S1588	D501~507, 551~557, 701, 702, 751, 752, 803, 804, 806~808, 811~827.	DIODE
GZA22Y	D802	DIODE
15-168	L501, 551.	CHOKE COIL, 3.7μH
100V 0.1μF	C810	FILM CAPACITOR, UMS
125V 4700pF	C815	CERAMIC DISC CAPACITOR, ECK-DNS472
6.3V 1000μF	C505, 555.	ELECTROLYTIC CAPACITOR
16V 1000μF	C704, 754.	ELECTROLYTIC CAPACITOR
35V 2200μF	C801, 802.	ELECTROLYTIC CAPACITOR
50V 0.1μF	C816, 828~831, 835, 838~840.	SEMI-CONDUCTIVE CERAMIC
41-136	R641 (BALANCE)	ROTARY VOLUME CONTROL, 20KW
41-694	R630, 631. (BASS,TREBLE)	ROTARY VOLUME CONTROL, 20KB×2
41-8001	R546 (VOLUME)	MOTORED VOLUME CONTROL, EUW-MWF325B24
41-7110	R545 (CHANNEL BALANCE)	VARIABLE RESISTOR, 1K OHM
1W 150 ohm	R712, 762.	OXIDE METAL FILM RESISTOR, RS1FSM
7.5K ohm	R512, 562.	METAL FILM RESISTOR, RNK2E
95.3K ohm	R511, 561.	METAL FILM RESISTOR, RNK2E
⚠10 ohm	R801, 802.	FUSIBLE RESISTOR, ERD2FC-P
⚠1/4W 207M	R858	UL-RESISTOR
81-2351	S601 (BYPASS)	PUSH SWITCH
81-2352	S502	PUSH SWITCH BANK (3 SWITCHES)
81-2353	S801	PUSH SWITCH BANK (6 SWITCHES)
81-317	S602, 603. (FREQUENCY TURNOVER)	LEVER SWITCH, SLLR54
81-447	S501, 503. (MM/MC, INFRA ON/OFF)	SLIDE SWITCH, SSP322
81-318	S504 (COPY)	LEVER SWITCH, SLLRW0
81-455	S505	SLIDE SWITCH, SSSR24
81-508		FLEXIBLE SWITCH JUNCTURE, SWWR20.
⚠81-625	RY801	RELAY
82-2130	J501 (PHONO)	RCA PIN-JACK, 2P
82-2157	J504, 505. (EPL, OUTPUT)	RCA PIN-JACK, 4P
82-2159	J502, 503. (CD, VIDEO, TAPE 1, TAPE 2)	RCA PIN-JACK, 6P
⚠250V 200mA.	FU801	FUSE, 5TT200 (A, A1)
⚠250V T100mA.	FU801	FUSE, 5ST100 (B & C)
71-1246		FUSE HOLDER, 5ø
84-3258		CONNECTOR W/LEAD, L=350, RED/BLACK
84-3259		CONNECTOR W/LEAD, L=350, ORANGE/BLACK.

PARTS NO.	SYMBOL NO.	DESCRIPTION
84-3260	J508	CONNECTOR W/LEAD, L=180, WHITE
84-3261	J802	CONNECTOR W/LEAD, L=400, 7-COLORED
84-3262	J801	CONNECTOR W/LEAD, L=180, 8-COLORED
84-3263	J507	CONNECTOR W/LEAD, L=240 & 280, 10-COLORED
87-6017		JUMPER CABLE, 3-CONDUCTORS, L=120
87-6077		JUMPER CABLE, 3-CONDUCTORS, L=100
87-6079		JUMPER CABLE, 3-CONDUCTORS, L=140
87-6089		JUMPER CABLE, 7-CONDUCTORS, L=260
87-6104		JUMPER CABLE, 2-CONDUCTORS, L=275
87-6113		JUMPER CABLE, 3-CONDUCTORS, L=340
87-6127		JUMPER CABLE, 3-CONDUCTORS, L=270
87-155		PIN TERMINAL, KSB-2L 75
87-178		PIN TERMINAL, KSB-2L 100
87-179		PIN TERMINAL, KSB-3L 100
74-3105-0		HEAT SINK

8) HEADPHONE CONNECTOR ASSEMBLY; H004A (EXPLODED VIEW INDEX #45)

PARTS NO.	SYMBOL NO.	DESCRIPTION
72-2242-0		P.C. BOARD
82-2199-0	J901	HEADPHONE JACK , HLJ-4308-01-3010

9) POWER SWITCH ASSEMBLY; S096A (EXPLODED VIEW INDEX #46)

PARTS NO.	SYMBOL NO.	DESCRIPTION
72-2243-0		P.C. BOARD
81-2350-0	S901	PUSH SWITCH

10) CHASSIS-MOUNTED COMPONENTS

PARTS NO.	SYMBOL NO.	DESCRIPTION
87-293-0		TUNING SHAFT, 43ø 25L
71-1912-0		ROTARY DISC (INTERRUPTOR FOR SENSOR)
11-5121-0		AM BAR ANTENNA W/HOLDER, L=220μH
82-2171-0		ANTENNA TERMINAL, PT-S02F06
*82-2191-0		F-TYPE ANTENNA CONNECTOR, P2133 (A, A1)
*82-119-0		ANTENNA CONNECTOR, P-2132-A (B & C)
⚠AC-T03FB03	J904	AC OUTLET (A, A1)
⚠AC-T01FB54	J903	AC OUTLET (A, A1)
⚠85-267		AC POWER CORD, 2.1M, POLARIZED. (A, A1)
⚠62-3332-0		BUSHING FOR AC POWER CORD, 4N-4
⚠23-1336-0		POWER TRANSFORMER (A)
⚠SM126A1		THERMAL FUSE (BUILT IN 23-1336-0)
⚠23-1335-0		STAND-BY TRANSFORMER
87-3260-0		HEXAGON STUD, L=33
87-3242-0		GROUND TERMINAL
⚠63-1843-0		FUSE RATING LABEL (A, A1)

EXPLODED VIEW PARTS LIST

Index No.	Parts No.	Description
1	63-6287-0-0	Front Panel
2	62-1111-0-0	Push Button(black)-Selectors
3	62-1111-1-0	Push Button(green)-On/Off
4	N44957-BK	Push Button(black)-Selectors
5	N44956-BK	Push Button(black)-Memory
6	N44988-RD	Push Button(red)-Enter
7	62-2320-0-0	Tuning Knob
8	BK3025	Rotary Knob-volume/balance
9	62-2331-0-0	Rotary Knob-tone control
10	62-2332-0-0	Toggle Cap
11	62-3480-0-0	Push Button Frame
12	63-5176-0-0	Window-1
13	63-5177-0-0	Window-2
14	63-5178-0-0	Window-3
15	62- 407-0-0	Subpanel
16	92-2114-0-0	Rotary knob spaser
17	88- 171-0-0	Spring-Push Button Return
18	92-2112-0-0	Foot-Plastic Rivet Type
19	63-1844-0-0	Label: This is not a handle
20	71-2652-0-0	Front Chassis
21	71-2653-0-0	Side Chassis (R)
22	71-2654-0-0	Side Chassis (L)
23	71-2655-0-0	Subchassis-front to rear support
24	71-2656-0-0	Subchassis-left to right support
25	71-2649-0-0	Rear Panel (A,A1)
	71-2651-0-0	Rear Panel (B,B1,C,C1)
26	71-1931-0-0	Bracket-PCB Support
27	71-1912-0-0	LED Interrupter
28	71-3122-0-0	Cabinet
29	71-3110-0-0	Bottom Cover
30	87- 293-0-0	Tuning Shaft
⚠31	62-3332-0-0	Bushing-AC Power Cord/AM Antenna
32	87-3242-0-0	Ground Terminal
33	82-2191-0-0	F Type Antenna Connector (A,A1)
	82- 119-0-0	Antenna Plug (B,B1,C,C1)
34	82-2171-0-0	AM Antenna Terminal
⚠35	82-2178-0-0	Receptacle(A,A1)-Single
⚠36	82-2189-0-0	Receptacle(A,A1)-Triple
⚠37	85- 267-0-0	Power Cord (A,A1)
		Power Cord (B)
		Power Cord (B1)
		Power Cord (C,C1)
38	HLJ0999-01-480	Locking Plate-Head Phone Jack
⚠39	23-1336-0-0	Power Transformer
⚠40	23-1335-0-0	Standby Transformer
41	11-5121-0-0	AM Bar Antenna
42	87-3260-0-0	Hexagon Stud
43	J025A	Pre-Amp/Power Supply PCB Assembly
43-1	81-2351-0-0	Push Switch-Bypass
43-2	81-2352-0-0	Function Switch Bank (3 Switches)

Index No.	Parts No.	Description
43-3	81-2353-0-0	Function Switch Bank (6 Switches)
43-4	81- 317-0-0	Lever Switch-Turnover
43-5	81- 318-0-0	Lever Switch-Copy
43-6	81- 447-0-0	Slide Switch-Phono MM/MC Selector -Infrasonic On/Off
43-7	81- 455-0-0	Slide Switch-Copy
43-8	41- 136-0-0	Rotary Potentiometer-Balance
43-9	41- 694-0-0	Rotary Potentiometer-Tone Control
43-10	41-8001-0-0	Rotary Potentiometer (Motor Driven)
43-11	82-2130-0-0	RCA Connector-Single
43-12	82-2157-0-0	RCA Connector-Double
43-13	82-2159-0-0	RCA Connector-Triple
44	M118A	LED Indicator PCB Assembly
45	H004A	Headphone Connector PCB Assembly
45-1	82-2166-0-0	Headphone Jack
46	S096A	Power Switch PCB Assembly
46-1	81-2350-0-0	Push Switch-On/Off
47	I029A	Tuner PCB Assembly
47-1	74-3111-0-0	Heat sink
47-2	74-3112-0-0	Heat sink
48	S095A	Tactile Switch PCB Assembly
48-1	81-2345-0-0	Momentary (Tactile) Switch-Memory & Function
49	D016A	Display PCB Assembly
49-1	SL-5653-01	LED Display
49-2	SBX1483-51	Remote Control Infrared Detector
50	N004A	Rotary Sensor PCB Assembly
50-1	TLP801	Photo Interrupter
51	F017C	FM Frontend PCB Assembly
52		Tapping Screw (Phillips Head 3×6Cr)
53		Tapping Screw (Phillips Head 3×6Blk)
54		Tapping Screw (Phillips Head 3×8Cr)
55		Tapping Screw (Phillips Head 3×8Blk)
57		Tapping Screw (Washer Head 3×6Cr)
58		Machine Screw (Phillips Head 3×6Cr)
59		Machine Screw (Pan 3×6Cr)
61		Machine Screw (Washer Head 4×8Cr)
62		Machine Screw C(Phillips Head 3×8Blk)
63		Machine Screw S(Washer Head 3×6Cr)
64		Cabinet Screw With Washer (4×6Blk)
66		Nut (Hexagon M4Cr)
67		Hexagon Flange Nut (M3Cr)
68		Hexagon Flange Nut (M4Cr)
69		Nut (Hexagon M8×0.75Cr)
70		Washer (Toothed Lock M4)
72		Washer (Toothed Lock M8)
73		Washer (Plain 4-10-0.8)
74		Terminal Lug (Met31-0107)
75		Nut (Hexagon M10Ni)
76		Terminal Lug (T5540-5)
77		Tone controls/Volume controls Nut (Hexagon 7-11-2)
78		Washer (Plain 7-12-0.5)

EXPLODED VIEW

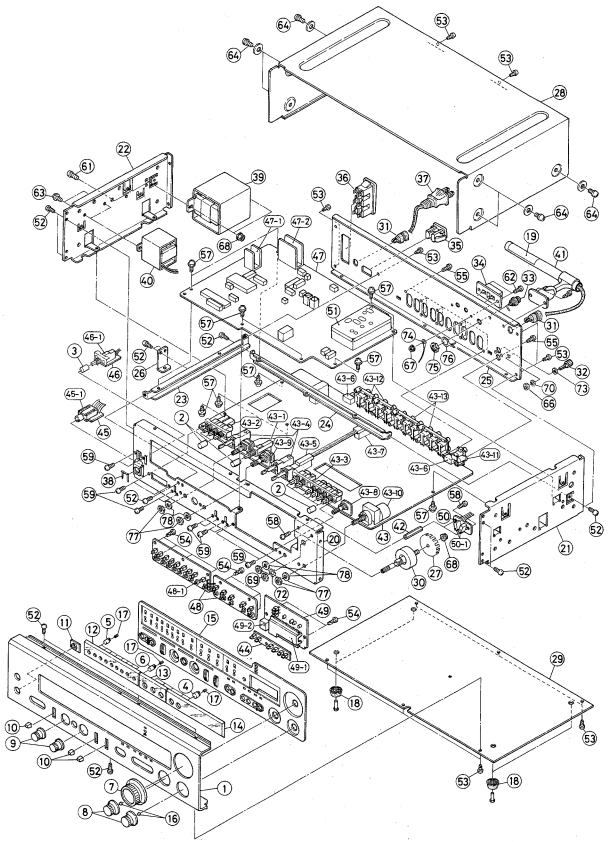

1700

SERVICE MANUAL

1700

PREAMPLIFIER/TUNER

© 1986 BY NAD 503 PRINTED IN JAPAN

NAD ELECTRONICS

BOSTON/LONDON